TABLE LAMP ABU DHABI T01804AU-WH

SKU: T01804AU-WH · ABU DHABI



Type	**Table lamps**
Diameter	**27 cm**
Height	**40 cm**
Net weight (product)	**1.5 kg**
Socket	**E27**
Number of light sources	**1**
Maximum power	**40W**
Light sources included	**No**
IP rating	**IP20**
Material	**Metal, Fabric**
Colour / finish	**Polished Gold**
Lampshade colour	**White**
EAN	**5902115966804**

DIMENSIONS

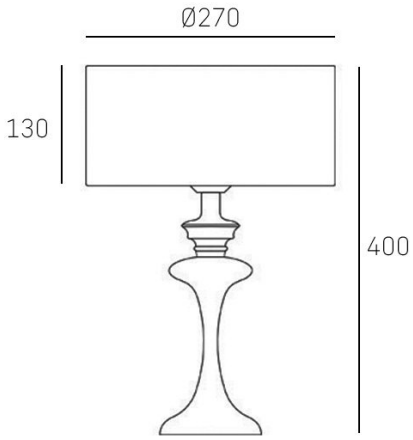

AVAILABLE VARIANTS

Silver	T01413CH-WH
Polished Gold	**T01804AU-WH**

CONTACT

COSMOLight / Evolution Home

biuro@cosmolight.pl · +48 534 206 432 · +48 534 206 433

Mon-Fri 8:00-16:00