TABLE LAMP ASCOT T01712BR-BG

SKU: T01712BR-BG · ASCOT



Type	**Table lamps**
Diameter	**36 cm**
Height	**56 cm**
Net weight (product)	**4.5 kg**
Socket	**E27**
Number of light sources	**1**
Maximum power	**40W**
Light sources included	**No**
IP rating	**IP20**
Material	**Metal, Ceramics, Fabric**
Colour / finish	**Brass, Black, Brown**
Lampshade colour	**White**
EAN	**5902115966712**

DIMENSIONS

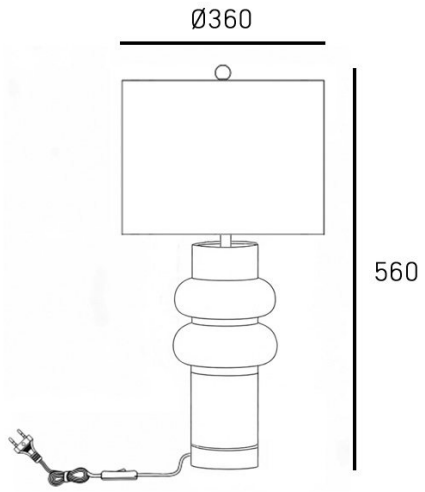

AVAILABLE VARIANTS

Brass, Black, Brown	**T01712BR-BG**
Pink, Beige	T01729BR-WH

CONTACT

COSMOLight / Evolution Home

biuro@cosmolight.pl · +48 534 206 432 · +48 534 206 433

Mon-Fri 8:00-16:00